Work Order ID 50503

July 10, 2009 2:53:29 PM

Item ID: D3964-1KIV
Revision ID: A-PROTO
Item Name: Light Cover w/ Ducts

Accept

Setup Start
Stop

Start Date: 07/13/2009 **Start Qty:** 1.00
Required Date: 07/17/2009 **Req'd Qty:** 1.00
Reference:

Cust Item ID:
Customer:

Approvals: **Process Plan:** MF **Date:** 09-07-10 **Tooling:** _____ **Date:** _____
QC: _____ **Date:** _____ **SPC (Y/N):** _____ **Date:** _____

Run Start
Stop

Sequence ID/ Work Center ID	Operation Description	Set Up/ Run Hours	Draw Number	Draw Rev.	Plan Code	Accept Qty	Reject Qty	Reject Number	Insp. Stamp
Draw Nbr	**Revision Nbr**								
D3964	A-~~PROTO~~ 09.0622								
100		0.00							
HandThermo	**Memo**	0.00							
Hand Finishing Thermoforming	1-Cut Sheet to required Blank size								
		BB 09/07/15 (X1)							
		M109723							
110		0.00							
Thermoform	**Memo**	0.00							
Thermoforming Machine	1-Machine Set-Up 2-Pre-heat Tool to required temp. 3-Thermoform as per Dwg and Folio #FTA065 using tool DT9xxx Dwg Rev: A Folio Rev: A								
		BB 09/07/15 (X1)							

1

Work Order ID 50503

July 10, 2009 2:53:29 PM

Item ID: D3964-1KIV
Revision ID: A-PROTO
Item Name: Light Cover w/ Ducts

Accept

Setup Start
Stop

Start Date: 07/13/2009 **Start Qty:** 1.00
Required Date: 07/17/2009 **Req'd Qty:** 1.00
Reference:

Cust Item ID:
Customer:

Run Start
Stop

Approvals: **Process Plan:** _____ **Date:** _____ **Tooling:** _____ **Date:** _____
QC: _____ **Date:** _____ **SPC (Y/N):** _____ **Date:** _____

Sequence ID/ Work Center ID	Operation Description	Set Up/ Run Hours	Draw Number	Draw Rev.	Plan Code	Accept Qty	Reject Qty	Reject Number	Insp. Stamp
120	QC2- Inspect parts off machine FAI/FAIB	0.00							
QC	**Memo**	0.00							
Quality Control	Visuallly inspect part for proper formation and texture								
130	QC8- Inspect parts - second check	0.00							
QC	**Memo**	0.00							
Quality Control									
140		0.00							
HandThermo	**Memo**	0.00							
Hand Finishing Thermoforming	1-Trim to finished dimensions as per Dwg								

BB 09/07/15 (X1)

Dh. 09/07/16 (X1)

BB 09/07/16 (X1)

Work Order ID 50503

July 10, 2009 2:53:29 PM

Item ID: D3964-1KIV
Revision ID: A-PROTO
Item Name: Light Cover w/ Ducts

Accept

Setup **Start**
Stop

Start Date: 07/13/2009 **Start Qty:** 1.00
Required Date: 07/17/2009 **Req'd Qty:** 1.00
Reference:

Cust Item ID:
Customer:

Run **Start**
Stop

Approvals: **Process Plan:** _____ **Date:** _____ **Tooling:** _____ **Date:** _____
QC: _____ **Date:** _____ **SPC (Y/N):** _____ **Date:** _____

Sequence ID/ Work Center ID	Operation Description	Set Up/ Run Hours	Draw Number	Draw Rev.	Plan Code	Accept Qty	Reject Qty	Reject Number	Insp. Stamp
150	QC2- Inspect parts off machine FAI/FAIB	0.00							
QC Quality Control	**Memo** Complete FAI document	0.00	BB	09/07/16	X1				
160	QC5- Inspect part completeness to step on W/O	0.00							
QC Quality Control	**Memo**	0.00	RH	09-07-20	ENGINEERING APPROVAL				
170	Identify as per dwg & Stock Location:_____	0.00							
Packaging Packaging	**Memo**	0.00	FOR ENG'G TEST	RH 09.07.20					

Work Order ID 50503

July 10, 2009 2:53:29 PM

Item ID: D3964-1KIV
Revision ID: A-PROTO
Item Name: Light Cover w/ Ducts

Accept

Setup Start
Stop

Start Date: 07/13/2009 **Start Qty:** 1.00
Required Date: 07/17/2009 **Req'd Qty:** 1.00
Reference:

Cust Item ID:
Customer:

Run Start
Stop

Approvals: **Process Plan:** _____ **Date:** _____ **Tooling:** _____ **Date:** _____
QC: _____ **Date:** _____ **SPC (Y/N):** _____ **Date:** _____

Sequence ID/ Work Center ID	Operation Description	Set Up/ Run Hours	Draw Number	Draw Rev.	Plan Code	Accept Qty	Reject Qty	Reject Number	Insp. Stamp
180	QC21- Final Inspection - Work Order Release	0.00							
QC Quality Control	Memo	0.00							

lh. 09.07.20 Prototype

BP 24-07-09
Issued to
RD303ASCL

Picklist Print

July 10, 2009 2:53:28 PM

Work Order ID: 50503

Parent Item: D3964-1KIVRevA-PROTO

Parent Item Name: Light Cover w/ Ducts

Start Date: 07/13/2009 **Required Date:** 07/17/2009

Comments:

Start Qty: 1.00 **Required Qty:** 1.00

Component Item ID/ Item Name	Replacement Item ID	Mfg/ Purch	Bin Item	Primary Location	Last Location	Route Seq ID	Unit of Measure	Qty on Hand	Remaining Qty To Pick	Qty Issued	Date Issued	Status
MKYD6185S.080-P3-62015		Purchased	No			100	sf	894.5038	1.0000			
6185 KYDEX .080"												

Warehouse Location	Loc Qty	Loc Code
Main Warehouse		
MAT	894.5037653	
109703	894.503765	

M109703
BB 09/07/15
27"X21" ÷ 5
W/O 50491
500
501
502

DART AEROSPACE LTD	Work Order:	50503.
Description: LIGHT COVER W/ DUCTS	Part Number:	3964-1KIV
Inspection Dwg: A Rev: A.		Page 1 of 1

FIRST ARTICLE INSPECTION CHECKLIST

[X] First Article [ ] Prototype

THERMOFORMING SECTION

Description	Accept	Reject	Method of Inspection	Comments
Inside Radii less than _____"	✓			
Shape Definition	✓			
Texture Retention	✓			
Material imperfections such as bumps, cracks, voids, scratching	✓			

Measured by:	BB.	Date:	09/07/16.

TRIMMING SECTION

Drawing Dimension	Tolerance	Actual Dimension	Accept	Reject	Method of Inspection	Comments
.25	± ~~0.030~~ 0.10 0.00.	.259	✓ ✓			
RH 09.07.20 ~~4.24~~ 4.1	Ref	4.125	✓			
~~6.5~~ 6.4	Ref.	6.4	✓			
2		2.01	✓			
0.040 .050		.051	✓			
RH 09.07.20 0.230	~~±~~ MIN	0.235	✓			
ϕ0.125	± ~~0.005~~ 0.001	ϕ0.127	✓			
0.75	± 0.03	±0.76	✓			
0.03	0.60	~~±0.01~~	✓			
0.50		±0.49	✓			
RH 09.07.20 0.38		0.37	✓			

Measured by:	BB	Date:	09/07/16.
Audited by:	RH	Date:	09-07-17
Prototype Approval:	RH	Date:	09-07-17

Rev	Date	Change	Revised by	Approved
A		New Issue	KJ/DL	

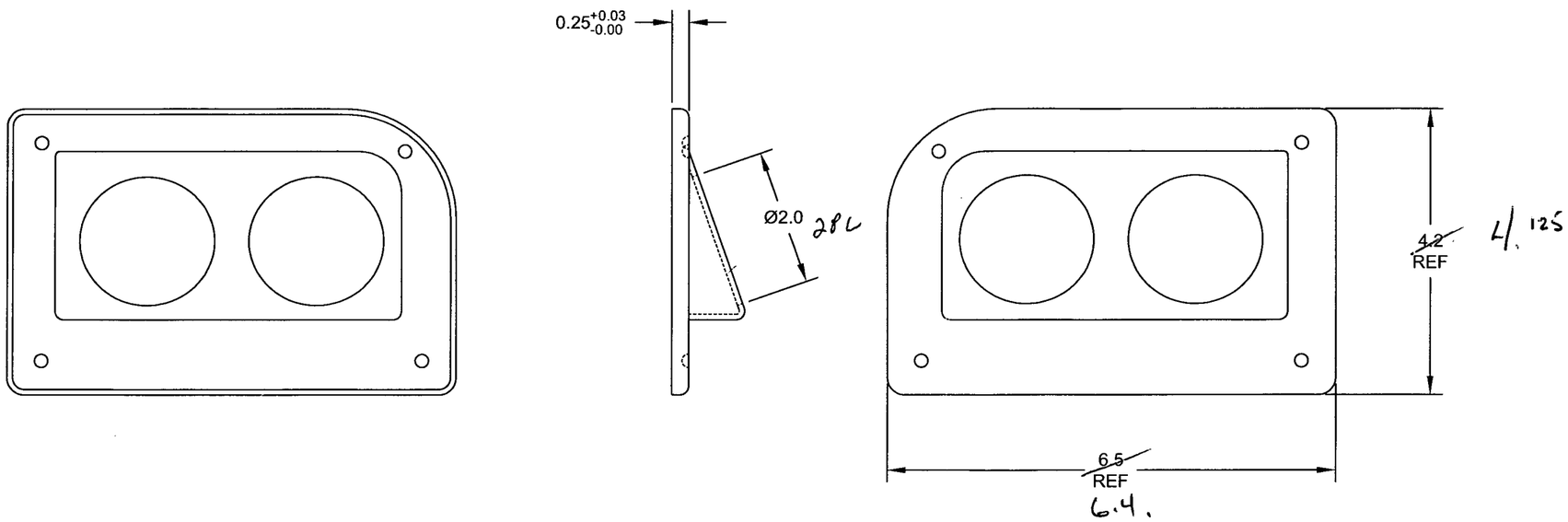

D3964-1 LIGHT COVER W/DUCTS

PROTOTYPE
PLEASE RETURN ALL ISSUED DATA TO ENGINEERING
09.07.08 PH

NOTES:
1) MATERIAL: SEE TABLE
2) FINISH: NONE
3) TOLERANCES: PER DART QSI 018 UNLESS OTHERWISE NOTED
4) UNITS: INCHES UNLESS OTHERWISE NOTED
5) BREAK SHARP EDGES: 0.005 TO 0.010 MAX
6) IDENTIFICATION: IDENTIFY WITH DART P/N (SEE TABLE) USING VIBRATING STYLUS
7) WEIGHT: 0.08 lbs
8) TOOLING: THERMOFORM PER MOLD DT9072 PER DART QSI 022. TRIM PER MOLD
9) MINIMUM THICKNESS: 0.050" UNLESS OTHERWISE NOTED

PART NUMBER	DESCRIPTION
D3964-1KIV	KYDEX 6185, 0.080 THICK, P3-VELOUR MATTE, IVORY #62015 (MKYD6185S.080-P3-62015)
D3964-1KGY	KYDEX 6185, 0.080 THICK, P3-VELOUR MATTE, STEEL GRAY #52068 (MKYD6185S.080-P3-52068)

REV.	DESCRIPTION	BY	DATE
A	NEW ISSUE	PH	09.06.22

DESIGN	
DRAWN	
CHECKED	
MFG. APPR.	
APPROVED	
DE APPR.	
DATE	09.06.22

DART AEROSPACE LTD
HAWKESBURY, ONTARIO, CANADA

DRAWING NO. D3964 — REV. A — SHEET 1 OF 2
TITLE: LIGHT COVER W/DUCTS (206 L3/L4) — SCALE: NTS

COPYRIGHT © 2009 BY DART AEROSPACE LTD
THIS DOCUMENT IS PRIVATE AND CONFIDENTIAL AND IS SUPPLIED ON THE EXPRESS CONDITION THAT IT IS NOT TO BE USED FOR ANY PURPOSE OR COPIED OR COMMUNICATED TO ANY OTHER PERSON WITHOUT WRITTEN PERMISSION FROM DART AEROSPACE LTD.

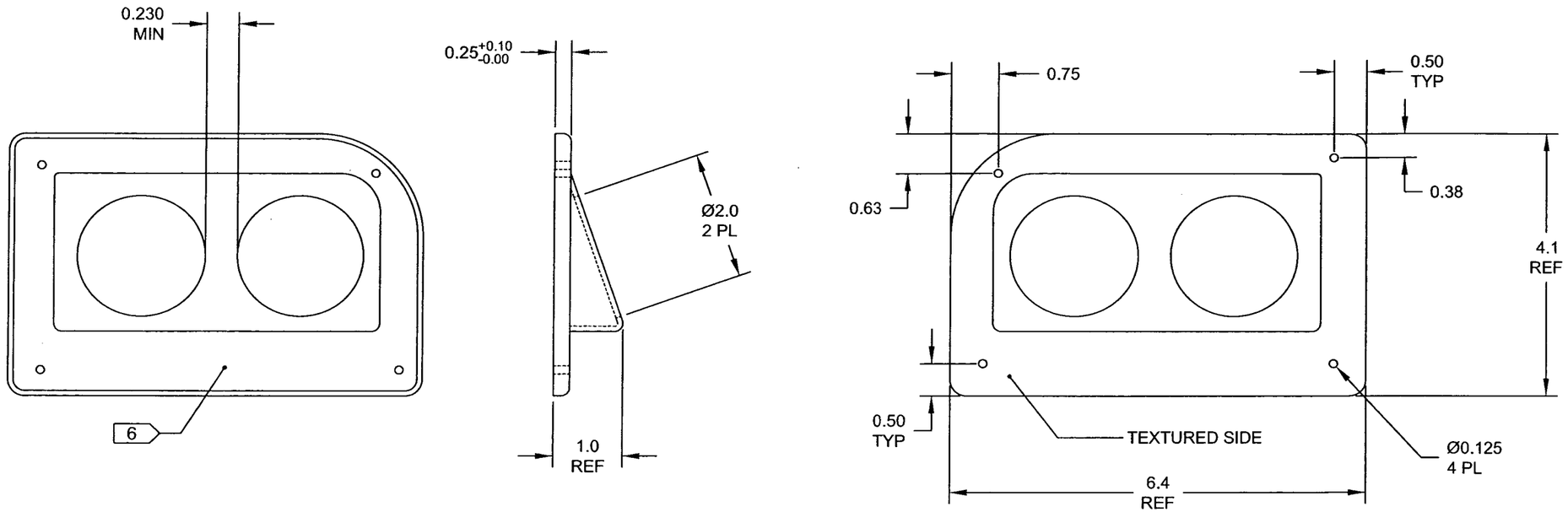

D3964-1 LIGHT COVER W/DUCTS

NOTES:

1) MATERIAL: SEE TABLE
2) FINISH: NONE
3) TOLERANCES: PER DART QSI 018 UNLESS OTHERWISE NOTED
4) UNITS: INCHES UNLESS OTHERWISE NOTED
5) BREAK SHARP EDGES: 0.005 TO 0.010 MAX
6) IDENTIFICATION: IDENTIFY WITH DART P/N (SEE TABLE) USING VIBRATING STYLUS
7) WEIGHT: 0.08 lbs
8) TOOLING: THERMOFORM PER MOLD DT9357 PER DART QSI 022. TRIM PER MOLD
9) MINIMUM THICKNESS: 0.040" UNLESS OTHERWISE NOTED

PART NUMBER	DESCRIPTION
D3964-1KIV	KYDEX 6185, 0.080 THICK, P3-VELOUR MATTE, IVORY #62015 (MKYD6185S.080-P3-62015)
D3964-1KGY	KYDEX 6185, 0.080 THICK, P3-VELOUR MATTE, STEEL GRAY #52068 (MKYD6185S.080-P3-52068)

REV.	DESCRIPTION	BY	DATE
A	NEW ISSUE	PH	09.06.22

DESIGN	
DRAWN	
CHECKED	
MFG. APPR.	
APPROVED	
DE APPR.	
DATE	09.06.22

DART AEROSPACE LTD
HAWKESBURY, ONTARIO, CANADA

DRAWING NO. D3964 — REV. A — SHEET 1 OF 2
TITLE: LIGHT COVER W/DUCTS (206 L3/L4) — SCALE: NTS

COPYRIGHT © 2009 BY DART AEROSPACE LTD
THIS DOCUMENT IS PRIVATE AND CONFIDENTIAL AND IS SUPPLIED ON THE EXPRESS CONDITION THAT IT IS NOT TO BE USED FOR ANY PURPOSE OR COPIED OR COMMUNICATED TO ANY OTHER PERSON WITHOUT WRITTEN PERMISSION FROM DART AEROSPACE LTD.